If we can be of any assistant or if you have any questions, please don't hesitate to contact us at (847) 360-9170.

You may also visit our website at
https://www.diecastmachinery.com

Thank you!

TOOL-TEMP®

Manual B-0224

Temperature control unit TT-380

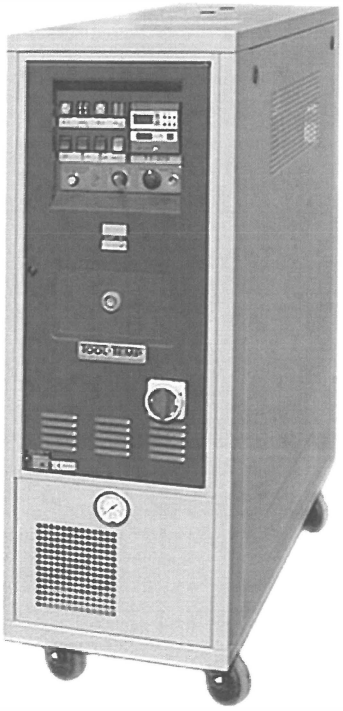

BA 1125 englisch
EL 1392/1394/1396 d/e/f/it

04/01

TOOL-TEMP AG
Industriestrasse 30
CH-8583 Sulgen
Schweiz – Suisse – Switzerland

tel. +41 (71) 644 77 77
fax +41 (71) 644 77 00

Contents

1. External connections

1.1 Fluid connections

The following minimum internal diameters are recommended:

connections:	
heating medium:	R 3/4“ female thread
internal hose diameter	15 mm
cooling water:	R 1“ male thread
internal hose diameter	22 mm

A built-in water filter with R 1“ female thread is mounted at the cooling water inlet.

For the connections to and from the mould it is important to use hoses resistant to heat and heat transfer liquids. We recommend to use metal armoured Teflon hoses up to +200°C. Over +200°C you will have to use all-metal hoses.

For the cooling water connections it is enough to use pressure resistant rubber hoses. The tap water pressure has to be between 1,0 and 8,0 bar. We recommend to conduct the water from the unit (cooling water outlet) to an unpressurized outlet.

The cooling water outlet has to be R 1“.

Quick release couplings will give reduced flow and are not suitable when the unit is used as a leakstopper. If the recommended tube size cannot be connected to the mould, the diameter of the mould connection has to be reduced and not the connection on the temperature control unit. In this way pressure drop can be avoided.

1.2 Power supply

Mains voltage and frequency according to the serial plate. Pay attention to the local regulations during the installation of the unit.

colours of cables:

phases	black / black / black	L1 / L2 / L3
earth	yellow/green	PE

max. power consumption: see name plate

Do not switch on until the heating medium hoses are connected.

2. Heat transfer liquid

2.1 Thermal oil

With temperatures up to +250°C it can be operated with mineral heat transfer oils such as Shell Thermia B, BP Transcal N, Essotherm 500, etc.
For permanent temperatures of +250°C you have to use MARLOTHERM SH.

3. Installation

Ensure all hoses are connected as in point 1.

3.1 Filling

Content according to the plate at the rear of the unit. This filling amount must not be exceeded so that the unit has the largest possible expansion and return volume.

3.2 Direction of pump rotation

As soon as the unit has been connected to the mains, hose connections have been made and the heat transfer liquid has been added, the direction of the motor must be checked. The vacuum switch has to be set to position bar and the direction of the pump must be clockwise as shown by the arrow on the ventilation cover.

The direction of rotation can be determined by looking through the ventilation slots.
If the motor is rotating anti-clockwise invert two phases.

4. Operations

4.1 Setting of the temperature

temperature controller
Set the desired temperature on the temperature controller. Switch on all heating levels to heat up.
To keep the temperature on the set value the heating capacity should be kept as small as possible.

The lamp in the switch „Heating I-II" and the red diode in the controller indicate that the operation mode is **HEATING**.

Likewise the operating mode **COOLING** is indicated by the green diode in the temperature controller.

See instructions „Programming: Temperature controller MP-694" for details about function and setting of the controller (see chapter 11).

4.2 Change over of internal / external control

Switching to the mode **INTERN** means that the temperature of the heat transfer medium is regulated in the unit. Switching to the mode **EXTERN** means that the temperature is regulated at the process. For temperature control at the process a temperature sensor must be mounted. In case the sensor is not connected the unit automatically switches over to the cooling mode and indicates sensor failure.

The type of sensor must be compatible with the unit. If a different type of sensor is used the denoted temperature will not be accurate. The built-in temperature sensor is noted on the label of the temperature controller.

The unit does not have to be cooled down after use. It can be switched off in hot condition.

4.3 Leak prevention operation

In position bar the unit is operating under pressure and in position VAC as a leak prevention device. The pump now sucks heat medium through the mould, the temperature control will not be changed. The unit can only reach the optimal suction if hoses with a minimum internal diameter of 15 mm are used.

Rapid connection couplings reduce the suction drastically. This is why we recommend to avoid using them.

Leak prevention operation eliminates leaks from the mould area by sucking the medium around the process. The air is automatically vented.

Attention: When using check valves the leak prevention operation is not possible.

4.4 Automatic mould drainage

This function sucks the medium from the mould and hoses.
procedure:

- switch the unit off
- set the switch to position VAC
- press the green button (automatic mould drainage)

max. recirculating volume at +250°C approx. 9 litres

5. Safety devices

5.1 Pump

The pump motor is fitted with an overload relay. The units are equipped with line safety switches.

5.2 Heating

The heaters have to be switched on in the following order I-II.

In the electronic controller the maximum temperature is limited at +360°C. Exceeding this temperature the heaters switch off.

The temperature of +360°C can be adjusted according to the information sheet „Programming: Temperature Controller MP-694“ program step 01.

The mechanical safety thermostat is set to the maximum allowed temperature of approx. +370°C. Exceeding this temperature the unit stops and the lamp max. is lit.

As soon as the temperature falls to approx. +350°C the unit switches on automatically.

A second safety thermostat is monitoring the temperature of the heat transfer liquid if an external thermocouple is used. If the set medium temperature is exceeded, the lamp max. extern is lit and the heating switches off. As soon as the temperature falls below the set level the heating switches on automatically.

6. Monitoring devices

6.1 Level control

The oil level is automatically monitored. When switching the unit on the yellow indication lamp **on the right** is lit. The pump does not work. As soon as the level is high enough the right hand indication lamp will switch off and the pump will switch on automatically.

If you fill too much oil the yellow indication lamp **on the left** is lit and the unit switches off.

It is possible that you will have to add some more oil after the unit has been switched on because oil is conveyed to the application. This will only be the case if the application is very big.

If there is too much oil it can overflow at the rear of the unit.

6.2 Indication of faults (audible alarm)

During normal operation the horn should be switched on. In case the level in the tank falls below the minimum or the unit is switched off by the overload relay or the safety thermostat the horn will start ringing and the unit switches off. The alarm can be switched off by the switch.

7. Maintenance

7.1 Service schedule

The following may be required subject to use and environment:

- water filter	every month
- fixings (bolts and seals)	every 12 months
(pump – visual check)	every 6 months
- pump motor (fan impeller: clean via compressed air)	every 6 months

These intervals are for standard operation. For extreme service these intervals must be shortened accordingly. The oil should be changed every 4'000 working hours.

Established defects must be repaired.
To guarantee safety the unit must be repaired with original spare parts only.

Attention: Before maintenance is carried out switch off mains supply.

8. Faults

symptom	cause	correction
Green ON/OFF-switch **0 - I** is not lit, unit does not work.	- fuse defective - possibly transformer, relay or switch defective	- open the front door - replace the 5 x 20 mm 1 A fuse - replace defective parts
yellow lamp „level control“ is lit: right hand lamp is lit left hand lamp is lit	 too little medium in the unit too much medium in the unit because of expansion of the oil or too big filling amount	 top up medium drain oil If there is no valve mounted at the drainage point of the unit the drainage has to be done very carefully in case the oil is hot.
overflow of the unit at a certain temperature	expansion of the oil (approx. 10% per 100°C)	drain oil If there is no valve mounted at the drainage point of the unit the drainage has to be done very carefully in case the oil is hot.
red lamp „overload relay“ (M) is lit, horn is activated	overload relay of the pump motor has responded possibly 2-phase running	- let the motor cool down - open the unit's front door - press the blue button of the overload relay **„motor“** When the motor has cooled down the unit switches on again.
red lamp „safety thermostat“ is lit: max. horn is activated, unit stops running max. extern horn is not activated, heating switches off, unit is running	 max. unit temperature reached – thermostat has responded Unit is working using temperature control at the tool and the heat transfer liquid has heated up quicker than the tool.	 try to establish the cause – the thermostat setting may be too low - check controller - check contactors check the water circulation, mould channels and temperature sensor (safety thermostat resets itself)
red lamp „temperature monitoring“ limit is lit, horn is activated	difference between desired and actual temperature too big	check heating and cooling circuits

symptom	cause	correction
the temperature of approx. +90°C up to +120°C cannot be surpassed, pump does not convey anymore or only in batches	water in the oil circuit (a small amount of water or some other liquid is sufficient to cause problems as soon as its boiling point is surpassed)	- drain oil - blow out hoses and mould - top up new medium In case of bigger amounts of water it may become necessary to change the oil twice.
pump does not convey, no pressure (valid for initial operation)	air in the unit (only possible if the unit is new)	dismount hoses to and from mould, wait 5 minutes, then connect again - the unit is deaerated
the nominal temperature will not be reached, heating lamp is not lit, unit works	temperature delimiter in the controller switched the heating off - perhaps temperature delimiter set too low	The maximum temperature can be set on the controller (see „Programming: Temperature controller MP-694“).
temperature has stopped rising, heating lamp is lit-IIII-	- solenoid valve of the water cooling system not closed - perhaps solenoid valve for water cooling defective - maybe too big consumer - heating defective	- clean the solenoid valve, check signal to valve and function - repair or replace the solenoid valve - contact the supplier - measure the resistance of the heating
unit works, heating or cooling system is not working	temperature controller defective	replace the temperature controller

Attention: Switch off the main supply prior to fault finding.

9. Control panel

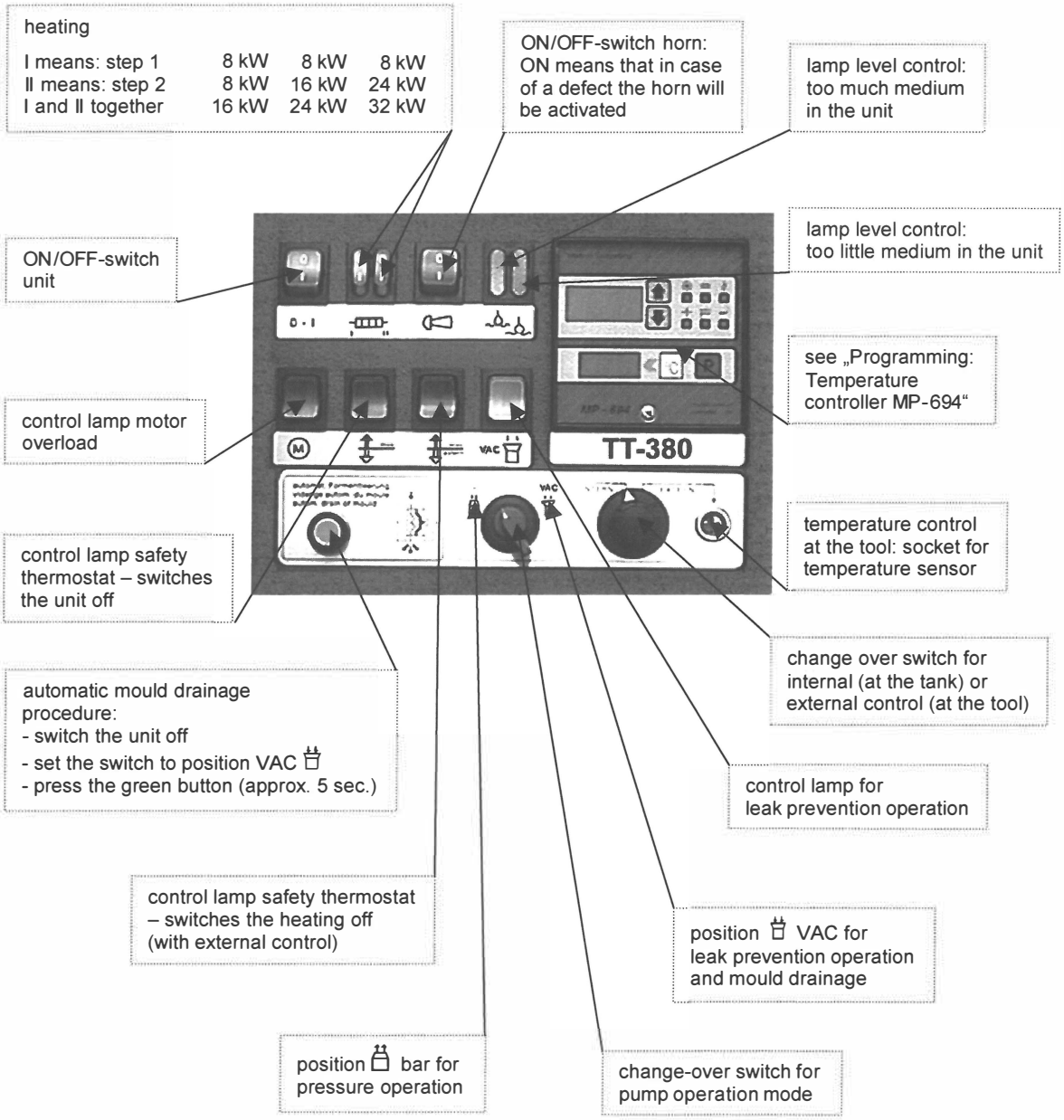

10. Photos

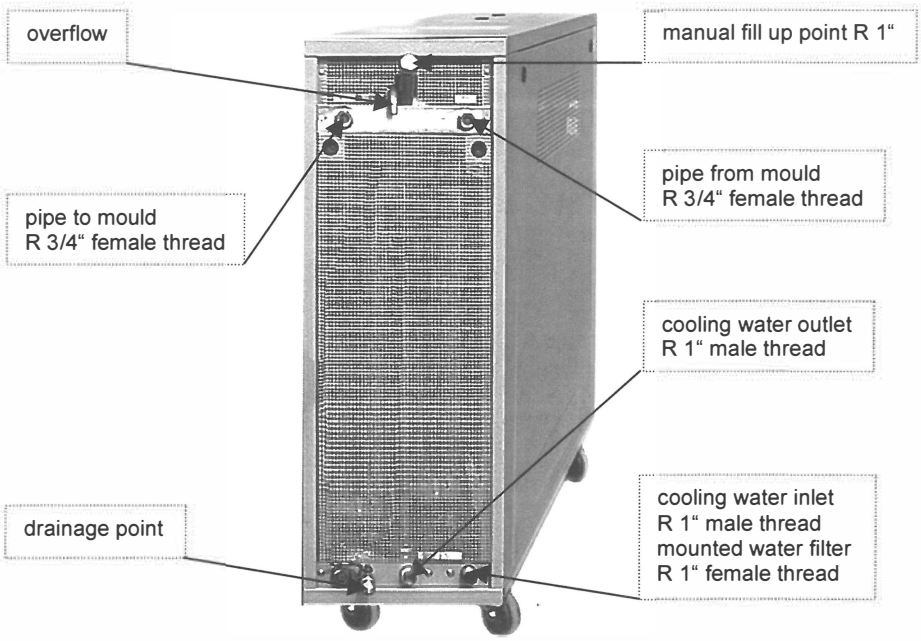

10.1 **Rear view**

* heating capacity 16 and 24 kW
** heating capacity 32 kW

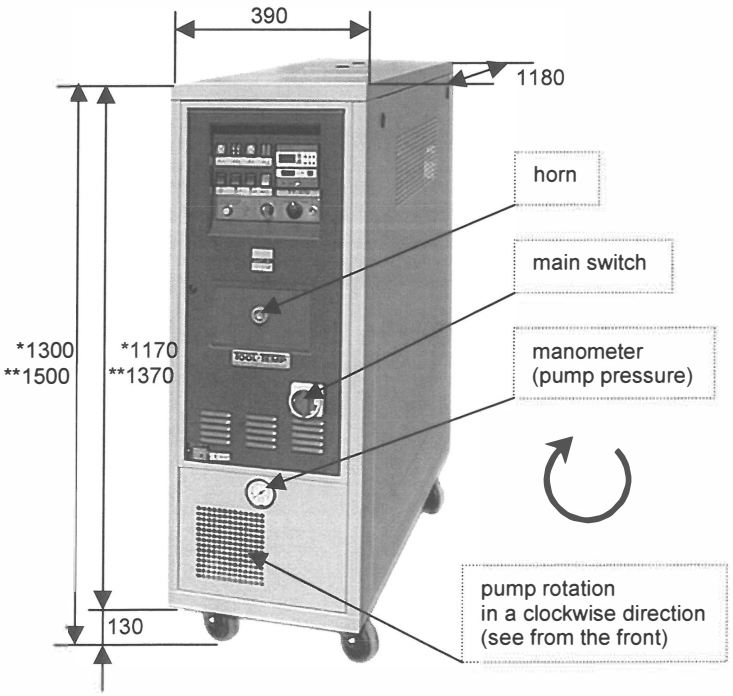

10.2 **Front view**

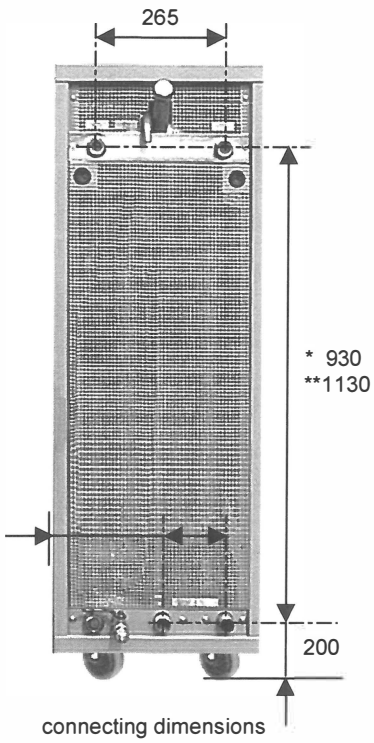

connecting dimensions

10.3 **Inside view**

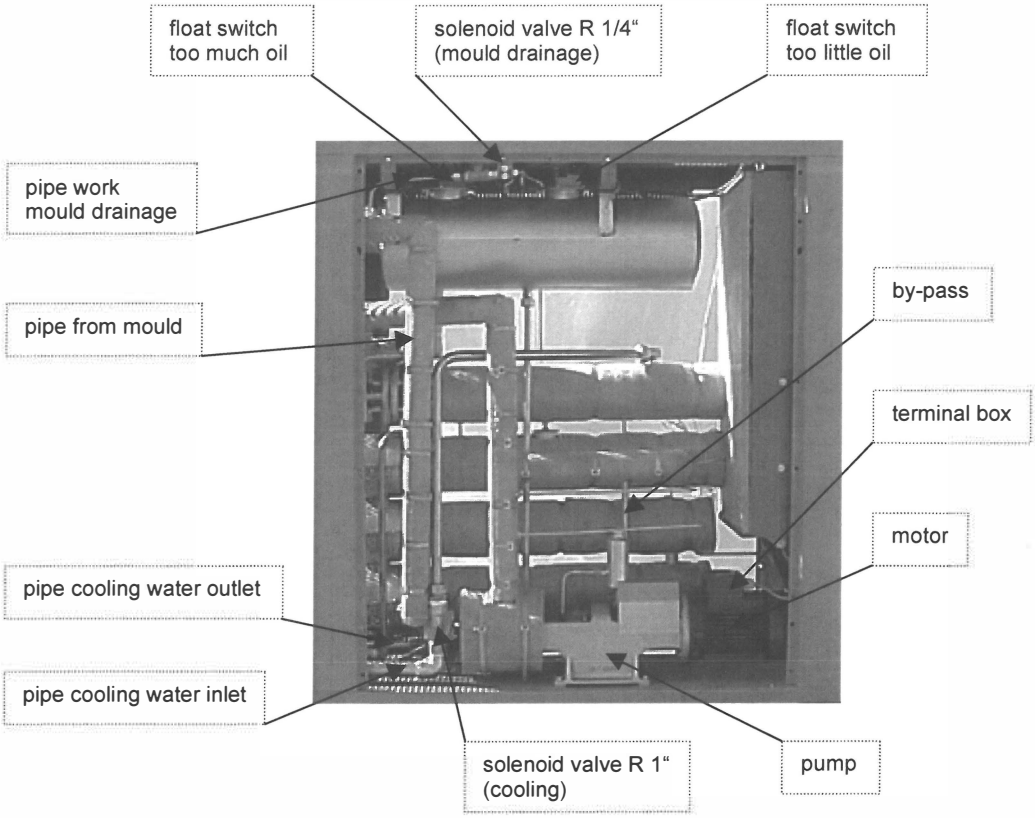

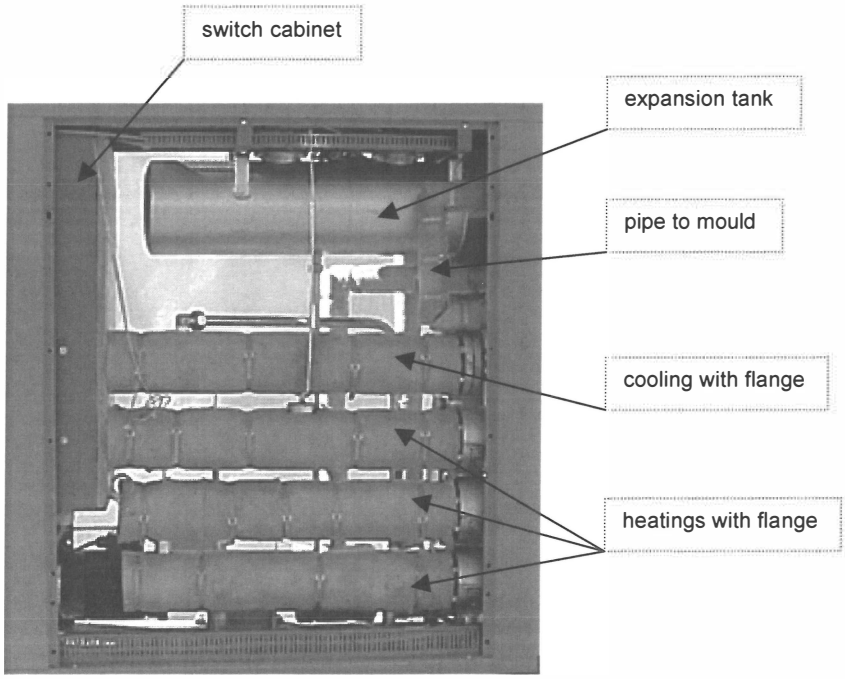

10.4 **Inside view switch cabinet**

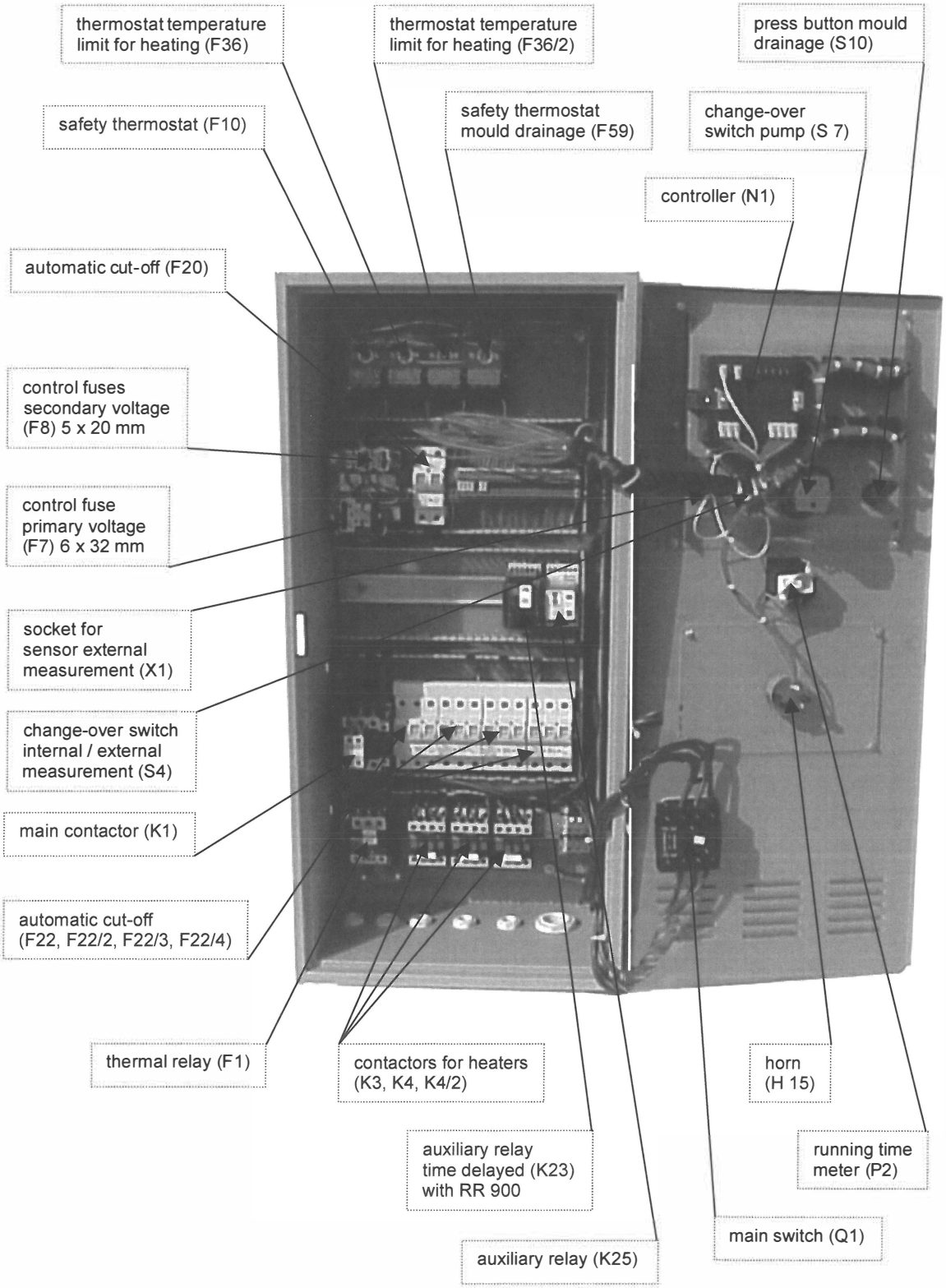

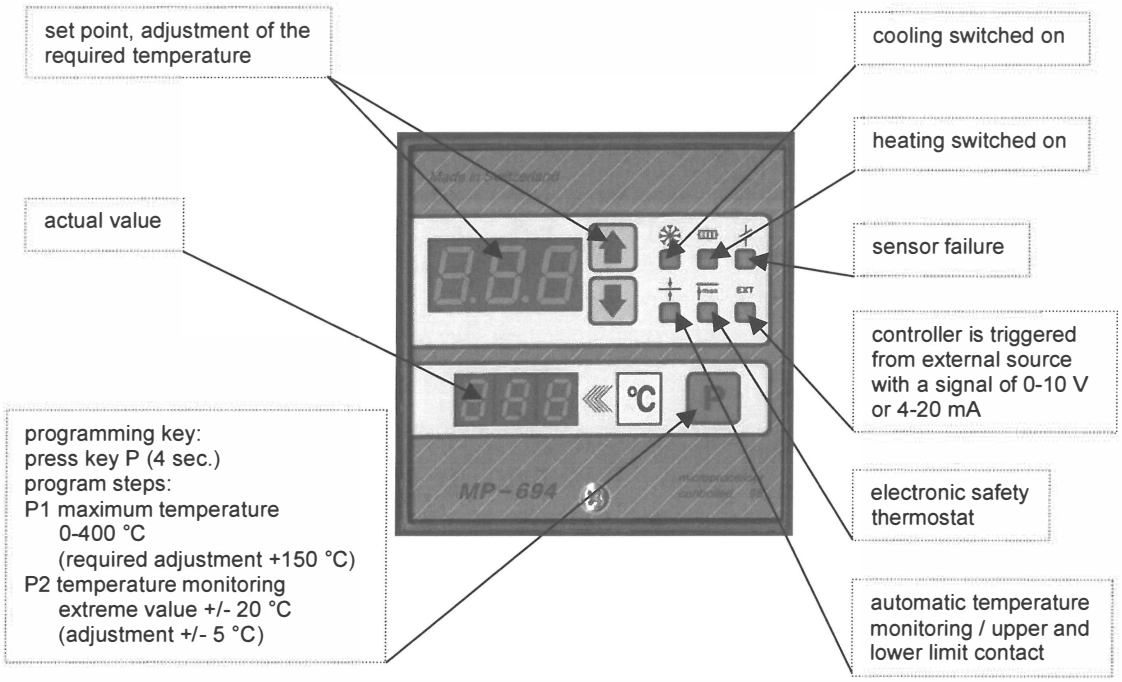
set point, adjustment of the required temperature
actual value
programming key:
press key P (4 sec.)
program steps:
P1 maximum temperature
0-400 °C
(required adjustment +150 °C)
P2 temperature monitoring
extreme value +/- 20 °C
(adjustment +/- 5 °C)
cooling switched on
heating switched on
sensor failure
controller is triggered from external source with a signal of 0-10 V or 4-20 mA
electronic safety thermostat
automatic temperature monitoring / upper and lower limit contact
°C
P
MP-694

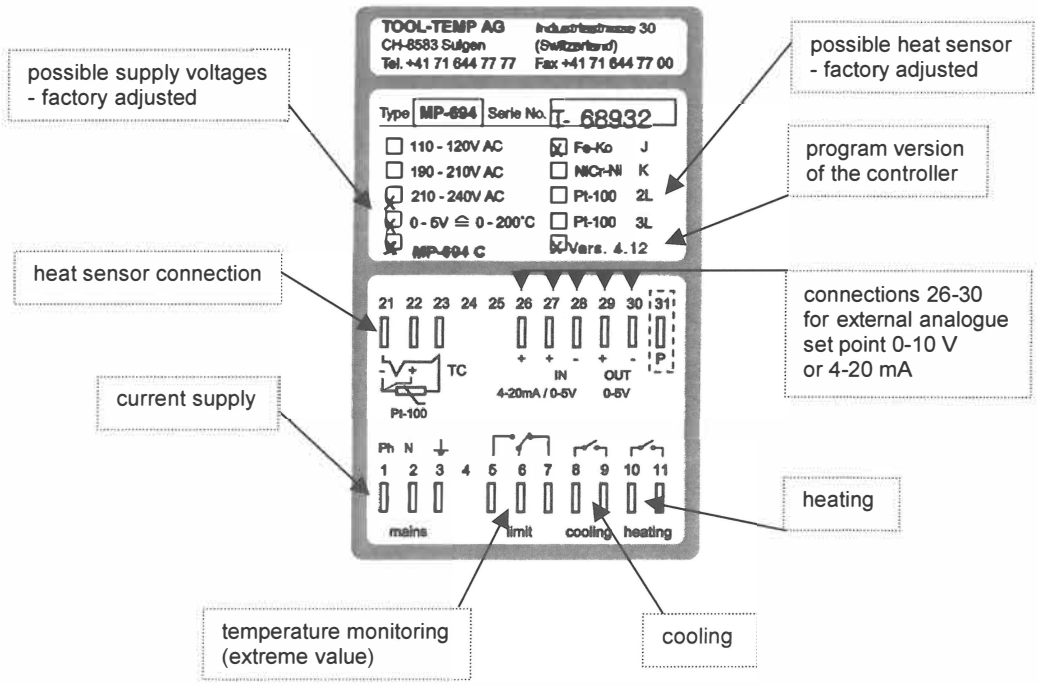
possible supply voltages - factory adjusted
heat sensor connection
current supply
possible heat sensor - factory adjusted
program version of the controller
connections 26-30 for external analogue set point 0-10 V or 4-20 mA
heating
temperature monitoring (extreme value)
cooling
TOOL-TEMP AG
CH-8583 Sulgen
Tel. +41 71 644 77 77
Industriestrasse 30
(Switzerland)
Fax +41 71 644 77 00
Type MP-694 Serie No. T- 68932
110 - 120V AC
190 - 210V AC
210 - 240V AC
0 - 5V ≙ 0 - 200°C
Fe-Ko J
NiCr-Ni K
Pt-100 2L
Pt-100 3L
Vers. 4.12
MP-694 C
21 22 23 24 25 26 27 28 29 30 31
TC
Pt-100
IN
OUT
4-20mA / 0-5V
0-5V
P
Ph N
1 2 3 4 5 6 7 8 9 10 11
mains
limit
cooling
heating

Programming: Temperature controller MP-694	Temperature control units				
Configuration summary		**Indication display**	**factory adjustment**	**Programmability**	**Key number**
Maximum temperature	-99...400		see below	PK	01
Temperature monitoring (extreme value)	+/- 0...20,0		5	PK	02
Temperature indication	Celsius	1	1	PG	20
	Fahrenheit	2			
Type of sensor	Fe-Ko J	1	1	PG	21
	NiCr-Ni K	2			
	Pt-100 2-wire	3			
	Pt-100 3-wire	4			
Intermediate resistance for Pt-100 2-wire	0...50 Ω		0	PG	22
Analogue input	unused	0		PG	23
	voltage 0 - 10 V	1	1		
	current 0 - 20 mA	2			
Starting interlock	off	0		PG	24
	on	1	1		
Adjustment range from	-99...0		-40	PG	25
Adjustment range to	0...400		400	PG	26
Temperature with 0 V analogue input	-100...0		0	PG	27
Temperature with 5 V analogue input	0...400		200	PG	28
Temperature with 0 mA analogue input	-100...0		-100	PG	29
Temperature with 20 mA analogue input	0...400		400	PG	30
Temperature with 0 V analogue output	-100...0		0	PG	31
Temperature with 5 V analogue output	0...400		200	PG	32
Heating Delta-W ●	-9,9... +9,9		0		40 ●
Heating proportional band ●	0,0...20,0		12		41 ●
Cooling Delta-W	-9,9...+9,9		**1.5**	PG	42
Cooling Hysteresis	0,2...20,0		**0.4**	PG	43
Heat differential part ●	0...100		50		44 ●
Heat correction Delta-W ●	0,0...5,0		1.5		45 ●
Heat correction proportional band ●	0,0...10,0		6		46 ●
Analogue output 0 - 5 V actual value	on/off		on	F	
Alarm relay	with extreme value		always	F	
	with max. temperature		never	F	
Type of controller	heating and cooling			F	
Controlling heating	proportional/differential			F	
Switching threshold voltage input	100 mV			F	
Switching threshold current input	2 mA			F	
Auto tuning	fix programmed			F	

PK	adjustable at program menu by customer
PG	adjustable at program menu by TOOL-TEMP
F	Fixed values not adjustable

Specific adjustment of temperature

Water units	90°C	PK	O1
Water pressure units	140°C / 160°C	PK	
Universal units	150°C	PK	
Oil units	200°C / 250°C / 300°C / 360°C	PK	

Factory adjustments - explanations:

This adjustment corresponds to:	-100...0		-100	PG	29
(4 - 20 mA ≙ 0 - 400°C)	0...400		400	PG	30
This adjustment corresponds to:	-100...0		0	PG	27
(0 - 5 V ≙ 0 - 200°C)	0...400		200	PG	28
	-100...0		0	PG	31
	0...400		200	PG	32

MP-694 program versions	3.06 without selfoptimizing	**Datum:**	17.05.01
	3.07 with selfoptimizing	**Visum:**	KO
	3.08 with extended selfoptimizing (● removed)	Programm	MS-Excel
	3.09 Pt-100 innovations (● removed)	Sprache	englisch

12. Spare parts and pump spares

12.1 Spare parts

Bb0300100	Quick fastener	for door switch cabinet
Bb0300500	Quick fastener	for side panel, consisting of clips and ball head
Ca2000500	Screwed cap	for manual fill
Db0200500	Seal	for heating 8000 W
Db0200501	Seal	for heat exchanger
Dc0100400	Castors Ø 100 mm	with 4 mounting holes
De0100300	Water filter R 1"	
De0202800	Nonreturn valve R 3/8"	for mould drainage
De0701200	Fastening screen	for manometer
De0701400	Manometer	-1 up to +6 bar, filled with glycerin
Df0200100	Solenoid valve R 1/4"	type 21 A2, for mould drainage
Df0200200	Solenoid valve R 1"	type 21 W4 KV, for water cooling
Df0200600	Spare coil for solenoid valve	R 1/4" type 21 A2 and R 1" type 21 W4 KV
Df0200900	Repair kit for solenoid valve	R 1/4" type 21 A2, consisting of: tappet
Df0200903	Repair kit for solenoid valve	R 1" type 21 W4 KV, consisting of: membrane, spring, tappet
Ec0100000	Coupling	for pump/motor type C-571, consisting of: 2 toothed wheels and synthetic carrier
Ec0100500	Synthetic carrier	for coupling pump/motor Typ C-571
Fa0500000	Controller MP-345	self-optimizing, new
Fa0500001	Controller MP-345	self-optimizing, in exchange
Fa0800000	Controller MP-694 FeKo	self-optimizing, new
Fa0800001	Controller MP-694 FeKo	self-optimizing, in exchange
Fa0800010	Controller MP-694 Pt-100	self-optimizing, new
Fa0800011	Controller MP-694 Pt-100	self-optimizing, in exchange
Gb0100400	Contactor	32 A, LC1 D1801 P7, 220 V (3 x 380-415 V)
Gb0100500	Contactor (16 and 24 kW)	50 A, LC1 D3201 P7, 220 V (3 x 380-415 V)
Gb0100800	Contactor (32 kW)	60 A, LC1 D4011 P7, 220 V (3 x 380-415 V)
Gb0700800	Thermal relay	4,0-6,0 A LR2D 1310 (3 x 380-415 V)
Gb0705000	Schrack relay	
Gb0705800	Time-lag relay	RR-900, 220 V
Gb0705900	Time-lag relay	RR-900, 110 V
Gb0800001	Time-lag module	time-delayed, 24-240 VAC/VDC for Schrack relay
Gb0800500	Base	11-poles, for level control / Schrack relay
Gc0100600	Transformer 70 VA	415/380/220 V - 220 V, standard
Gf0101200	Capillary thermostat	80-370°C
Gg0300000	Horn	
Gg0400000	Running time meter	230 V, 60 Hz
Gg0400100	Running time meter	230 V, 50 Hz
Gg0400200	Running time meter	110 V, 50 Hz
Gi0100000	Level switch	microswitch
Gk0200100	VAC-switch	with 3 switching levels, complete, front and back part
Gk0200200	VAC-switch	only front part with red handle
Gk0300100	Indication lamp	red, 33 x 25 mm
Gk0300300	Indication lamp	yellow, 33 x 25 mm
Gk0300400	Double indication lamp	yellow, 33 x 25 mm
Gk0300600	Double switch	green, 33 x 25 mm, for heating
Gk0300700	Switch	green, 33 x 25 mm, for ON/OFF and horn
Gk0500100	Press button	green, for automatic mould drainage
Gk0600000	Change-over switch	for external measurement

12.1 **Spare parts (continuation)**

	Main switch	63 A
Gl0200000	Fuses, small	5 x 20 mm, 1 A (packet of 10 pieces)
Gl0200001	Fuse carrier, big	6,5 x 32 mm, for transformer
Gl0200002	Fuse carrier, small	5 x 20 mm, for transformer
Gl0200003	Fuses, big	6,5 x 32 mm, 1 A (packet of 10 pieces)
Gl0200005	Fuse	6,5 x 32 mm, 6,3 A
Gl0200006	Fuse terminals F27	WK 10 mm^2, 6,3 A
Gl0400200	Automatic cut-off	6 A
Gl0400400	Automatic cut-off	16 A
Gn0600000	Plug Lemo no. 2	2-poles
Gn0700000	Socket Lemo no. 2	2-poles, for temperature sensor at the tool
Ha0102100	Motor 1,8 kW, 3000 u/min	3 x 380-415, 50 Hz / 3 x 230 V, 50 Hz
Ha0102101	Motor 1,8 kW, 3000 u/min	3 x 440-480, 60 Hz
Ha0102200	Motor 1,8 kW, 3000 u/min	3 x 200-220, 50/60 Hz / 3 x 380 V, 60 Hz
Ha0102110	Fan cover	for motor
Ha0102111	Fan paddle	for motor
Ha0102112	Cover for connecting box	for motor
Uc2100614	Drain tap	
Wa0100000	Heating 8000 W	3 x 220-230 V
Wa0100001	Heating 8000 W	3 x 380-415 V
Wa0100002	Heating 8000 W	3 x 440-480 V
Wa1000020	Thermocouple	internal Fe-Ko, 3000 mm
Wa1000021	Thermocouple	internal Pt-100, 3000 mm
Wa1000022	Thermocouple	internal NiCrNi, 3000 mm
Wb0201000	Pump C-571	complete with motor 1,8 kW, 3 x 380-415 V, 50 Hz
Wb0201001	Pump C-571	complete with motor 1,8 kW, 3 x 440-480 V, 60 Hz
Wb0201002	Pump C-571	complete with motor 1,8 kW, 3 x 200-220 V, 50/60 Hz
Wb0201003	Pump C-571	complete with motor 1,8 kW, 3 x 230 V, 50 Hz
Wb0201100	Pump C-571	without motor, without coupling (indicate Hz)
Wc0100021	Heat exchanger	model TT-380
Wd0100000	Float	with 4 set collars
We0100000	Sealing kit for pump	type C-571, consisting of: axial face seal complete, 2 sealing elements 35/18/10, special grease
Wf0100006	Insulation set	indicate heating power of the unit

12.2 Pump spares pump type C-571

pos.	description
101	Pump support
102	Transition piece
103	Case
104	Casing cover
105	Impeller
106	Bushing
107	Shaft
108	End piece
109	Grease box
110/111	Flat packing
112	Coupling, without gearwheels
113	Shaft sealing ring with special grease
114	Axial face seal
115	Union piece
116	Distance plate
117	Woodruff key
118	Wearing plate
119	Socket head cap screw
120/121	Spanner bolt
122/123	Washer
124/125	Screw plug with square head
126	Hex socket set screw with full dog point
127	Circlip for shaft
128	Circlip for bores
129	Set screw
130	Gearwheels
131	Set screw
132	Plastic bush
133	Spanner bolt
134	Washer
135	Pipe
136	Motor, indicate voltage

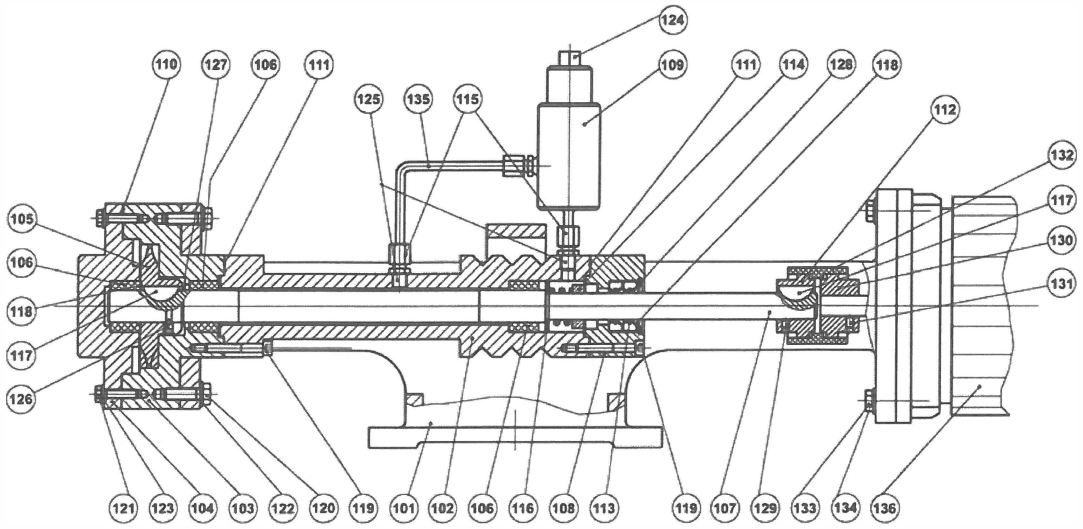

13. Datasheet timer

TOOL-TEMP time-lag relay
RR-900 220 V / RR-901 110 V

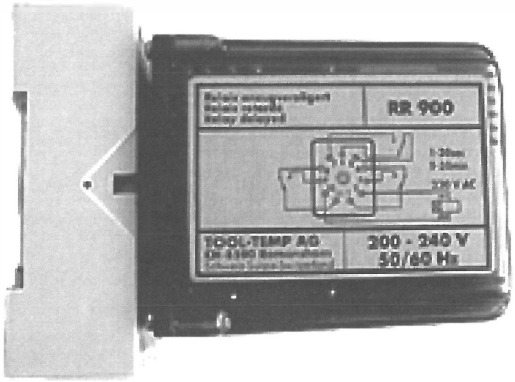

installed in model	function	designation elec.wiring diag.	adjusted time
TT-103 K, 113 K	delayed heating	K23, K23/2	3 sec
TT-133	delayed pump	K23	3 sec
TT-134	delayed pump delayed heating	K23 K23/2	3 sec 3 sec
TT-135	delayed pump delayed heating	K23/5 K23...K23/4	3 sec 9 sec
TT-136	delayed heating	K23...K23/4	9 sec
TT-139	delayed pump	K23	3 sec
TT-370, 370/2 TT-380, 380/2	delayed heating	K23...K23/4	3 sec
TT-400	delayed heating	K23	3 sec
TT-500	delayed heating	K23...K23/4	9 sec

14. Prinzipschema
Functional diagram
Schéma de principe
Schema di funzione

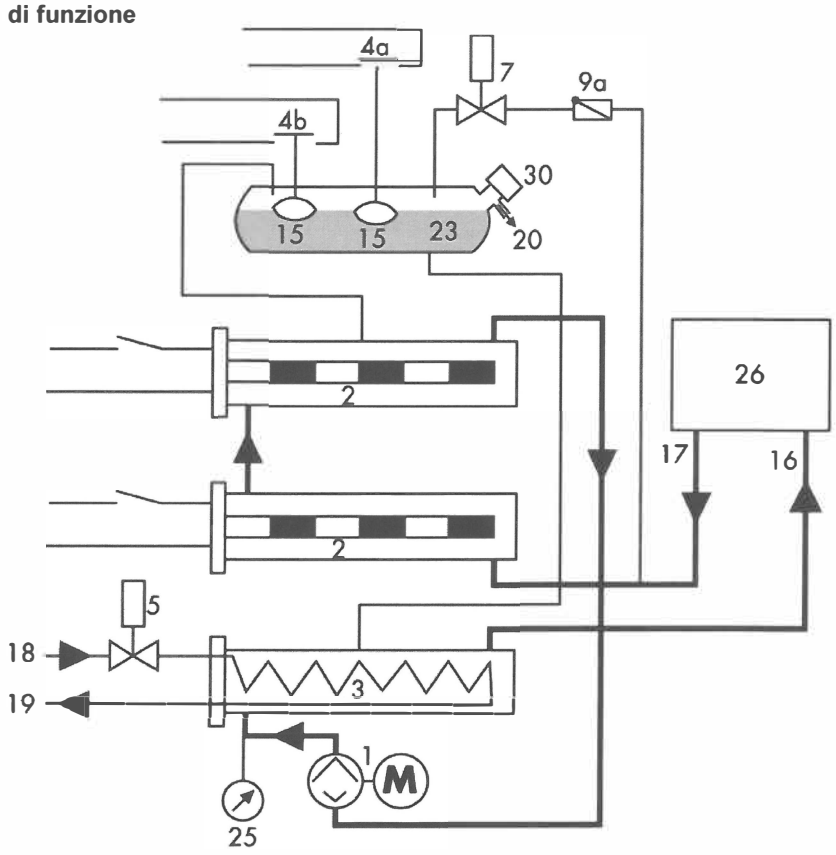

1 Pumpe mit Motor
Pump with motor
Pompe avec moteur
Pompa con motore

2 Heizung
Heating
Chauffage
Resistenza

3 Wärmetauscher
Heat exchanger
Echangeur de chaleur
Scambiatore di calore

4a Niveauschalter, Niveau tief
Level switch, low level
Interrupteur de niveau, niveau bas
Interrutore del livello, livello

4b Niveauschalter, Niveau hoch
Level switch, high level
Interrupteur de niveau, niveau
Interrutore del livello, livello

5 Magnetventil Kühlung
Solenoid valve cooling
Electrovanne refroidissement
Elettrovalvola del raffreddamento

7 Magnetventil Formentleerung
Solenoid valve mould drainage
Electrovanne vidange de moule
Elettrovalvola svuotamento stampo

9a Rückschlagklappe
Flap valve
Clapet
Valvola di ritegno

15 Schwimmer
Float
Flotteur
Galleggiante

16 Vorlauf
To mould
Aller moule
Allo stampo

17 Rücklauf
From mould
Retour moule
Dallo stampo

18 Kühlwasser ein
Cooling water inlet
Eau de refroidissement entrée
Ingresso acqua di raffreddamento

19 Kühlwasser aus
Cooling water outlet
Eau de refroidissement sortie
Uscita acqua di raffreddamento

20 Überlauf
Overflow
Trop plein
Sfiato di troppo pieno

23 Expansionsgefäss
Expansion vessel
Vase d'expansion
Vaso d'espansione

25 Manometer Pumpendruck
Manometer pump pressure
Manomètre pression pompe
Manometro pressione pompa

26 Verbraucher
Consumer
Consommateur
Utilizzo

30 Einfüllstutzen
Fill up point
Point de remplissage
Punto di riempimento

B 1	Thermoelement intern	internal thermocouple	thermocouple interne	termocoppia interna
F 1	Thermorelais Pumpe 1	overload relay pump 1	relais thermique pompe 1	interruttore a soccorritore termico pompa 1
F 7	Feinsicherung 1A primär T1	fuse 1A prim. T1	fusible verre 1A prim. T1	fusibile fino 1A primario T1
F 8	Feinsicherung 1A sekundär T1	fuse 1A sec. T1	fusible verre 1A sec. T1	fusibile fino 1A secondario T1
F 10	einstellbarer Sicherheitsthermostat	safety thermostat adjustable	thermostat de sécurité ajustable	termostato di sicurezza regolabile
F 15	Niveaukontrolle (Gerät aus)	level control (unit off)	contrôle de niveau (appareil arrêt)	controllo livello (spegne centralina)
F 20	Leitungsschutzschalter 6A	automatic cut-off 6A	disjoncteur 6A	interruttore 6A
F 22-/2/3	Leitungsschutzschalter 16A	automatic cut-off 16A	disjoncteur 16A	interruttore 16A
F 35	Niveau zu hoch	level too high	niveau trop haut	livello alto
F 36-/2	einst. Thermostat Temp.begrenzung für Heizung	adjust. thermostat temp.limit for heater	thermostat ajust. pour limitation du chauffage	termostato di sicurezza registrabile per temp. mass. riscald.
F 59	Sicherheitsthermostat Formentleerung	safety thermostat for mould drainage	thermostat de sécurité pour vidange du moule	termostato di sicurezza svuotamento stampo
H 1	Lampe Gerät EIN/AUS	unit ON/OFF lamp	lampe MARCHE/ARRET	lampada centralina ACCESO/SPENTO
H 2	Lampe Heizung 1	heater 1 lamp	lampe chauffage 1	lampada riscaldamento 1
H 3	Lampe Heizung 2	heater 2 lamp	lampe chauffage 2	lampada riscaldamento 2
H 4	Lampe Niveaukontrolle	level control lamp	lampe contrôle du niveau	lampada controllo livello
H 5	Lampe Hupe	horn lamp	lampe klaxon	lampada segnale acustico
H 6	Lampe Motorschutzrelais	overload relay lamp	lampe relais thermique	lampada termocoppia motore
H 7	Lampe Sicherheitsthermostat	safety thermostat lamp	lampe thermostat de sécurité	lampada termostato di sicurezza
H 15	Hupe	horn	klaxon	segnale acustico
H 21	Lampe Niveau zu hoch	lamp for level too high	lampe du niveau trop haut	lampada livello alto
H 26	Lampe VAC	VAC lamp	lampe VAC	lampada VAC
H 36	Lampe Sicherheitsthermostat für Heizung	lamp for safety thermostat for heater	lampe thermostat sécurité du chauffage	lampada termostato di sicurezza per riscaldamento
K 1	Schütz Pumpenmotor 1 (Hauptschütz)	contactor pump motor 1 (main contactor)	contacteur moteur pompe 1 (relais générale)	relais motore pompa 1 (relais generale)
K 3	Schütz Heizung 1	contactor heater 1	contacteur chauffage 1	relais riscaldamento 1
K 4	Schütz Heizung 2	contactor heater 2	contacteur chauffage 2	relais riscaldamento 2
K 25	Hilfsrelais allgemein	auxiliary for general use	relais auxiliaire gen.	relais ausiliario generale
M 1	Motor Pumpe 1	motor pump 1	moteur pompe 1	motore pompa 1
N 1	Temperaturregler	electronic temperature controller	régulateur électronique de température	regolatore temperatura
P 2	Betriebsstundenzähler	hours meter	compteur horaire	contatore ore funzionamento
Q 1	Hauptschalter	main switch	interrupteur générale	interruttore generale
R 1	Heizung 1	heater 1	chauffage 1	riscaldamento 1
R 2	Heizung 2	heater 2	chauffage 2	riscaldamento 2
S 1	Schalter Gerät "EIN-AUS"	switch unit "on/off"	interrupteur appareil "marche/arrêt"	interruttore centralina "acceso/spento"
S 2	Schalter Heizung 1	switch for heater 1	interrupteur chauffage 1	interruttore riscaldamento 1
S 3	Schalter Heizung 2	switch for heater 2	interrupteur chauffage 2	interruttore riscaldamento 2
S 4	Schalter Thermoelement/Fe-Ko/Pt-100	switch for thermocouple/Fe-Ko/Pt-100	interrupteur thermocouple/Fe-Ko/Pt-100	interruttore termocoppia/Fe-Ko/Pt-100
S 5	Schalter Hupe	switch for horn	interrupteur klaxon	interruttore segnale acustico
S 7	Wendeschalter Pumpe	change-over switch for pump	inverseur de marche de la pompe	invertitore di marcia per pompa
S 10	Drucktaster Formentleerung	press button for mould drainage	bouton-poussoir pour vidange du moule	pulsante svuotamento stampo
T 1	Trafo Steuerung	transformer for electric control	transformateur de commande	trasformatore di comando
X 1	Steckdose/Stecker für Thermoelement/Fe-Ko/Pt-100	socket/connector for thermocouple/Fe-Ko/Pt-100	prise/fiche pour thermocouple/Fe-Ko/Pt-100	presa/spina per termocoppia/Fe-Ko/Pt-100
Y 1	Magnetventil Wasserkühlung	solenoid valve for water cooling	électrovanne eau de refroidissement	valvola magnetica raffreddamento acqua
Y 15	Magnetventil Formentleerung	solenoid valve for mould drainage	électrovanne vidange du moule	valvola magnetica svuotamento stampo

			bearb.			TOOL-TEMP AG Kreuzlingerstrasse 71 CH-8590 Romanshorn (Schweiz) Tel. ++41 71 463 51 51	Elektroschema Wiring diagram Schéma électrique Schema elettrico	EL-1392	TT 380 16kW MP 694	Blatt	
			gez.	28.03.01	Ja					Nr.	Anzahl
			gepr.								
Änderung	Datum	Name	Ursprung		Ersatz für:	Ersetzt durch:					

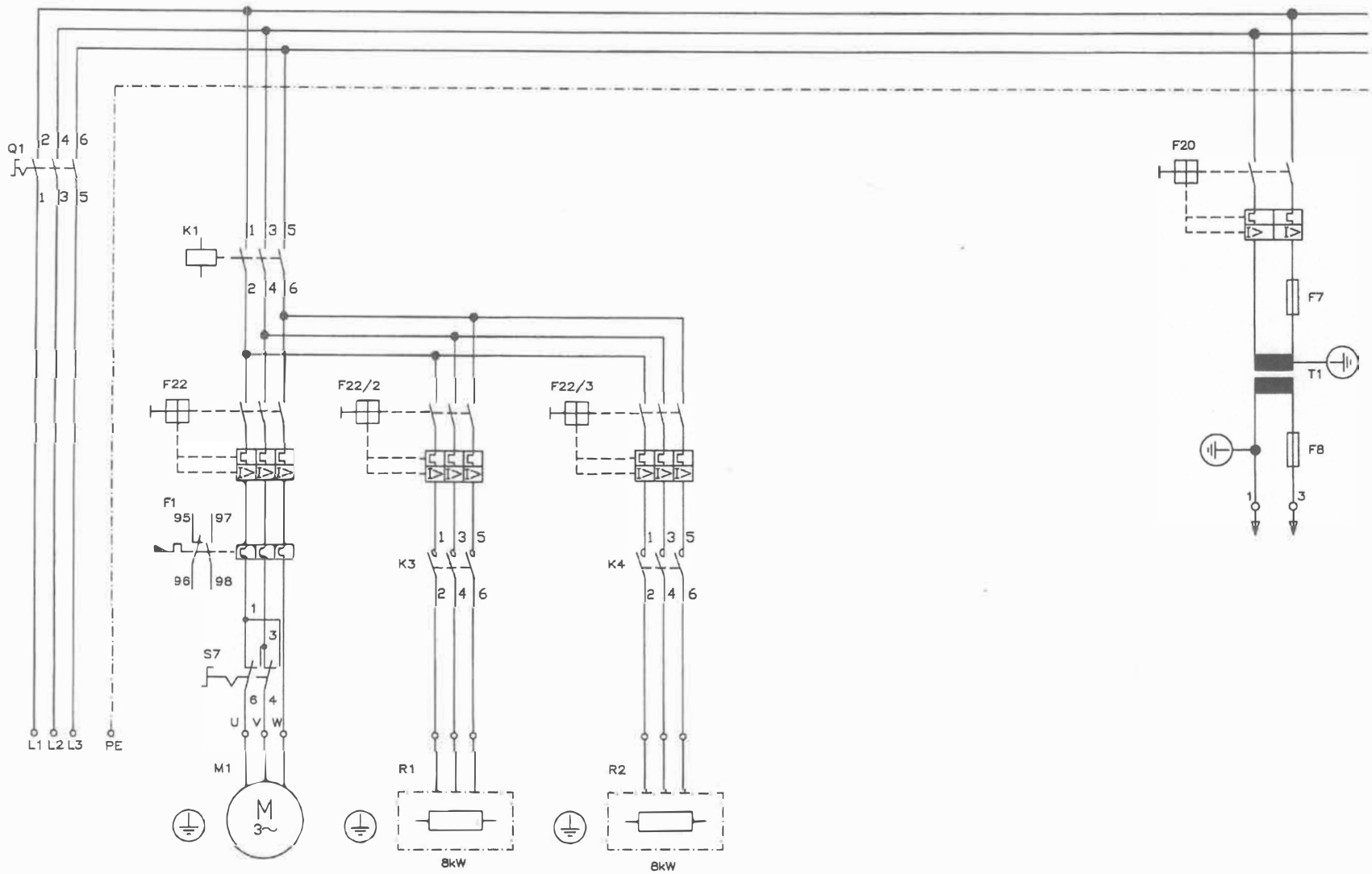

			bearb.			TOOL-TEMP AG Kreuzlingerstrasse 71 CH-8590 Romanshorn (Schweiz) Tel. ++41 71 463 51 51	Elektroschema Wiring diagram Schéma électrique Schema elettrico	EL-1392	TT 380 16kW 03/01 ->	Blatt Nr. / Anzahl
			gez.	28.03.01	Ja					
			gepr.	31.3.01						
Änderung	Datum	Name	Ursprung		Ersatz für:	Ersetzt durch:				

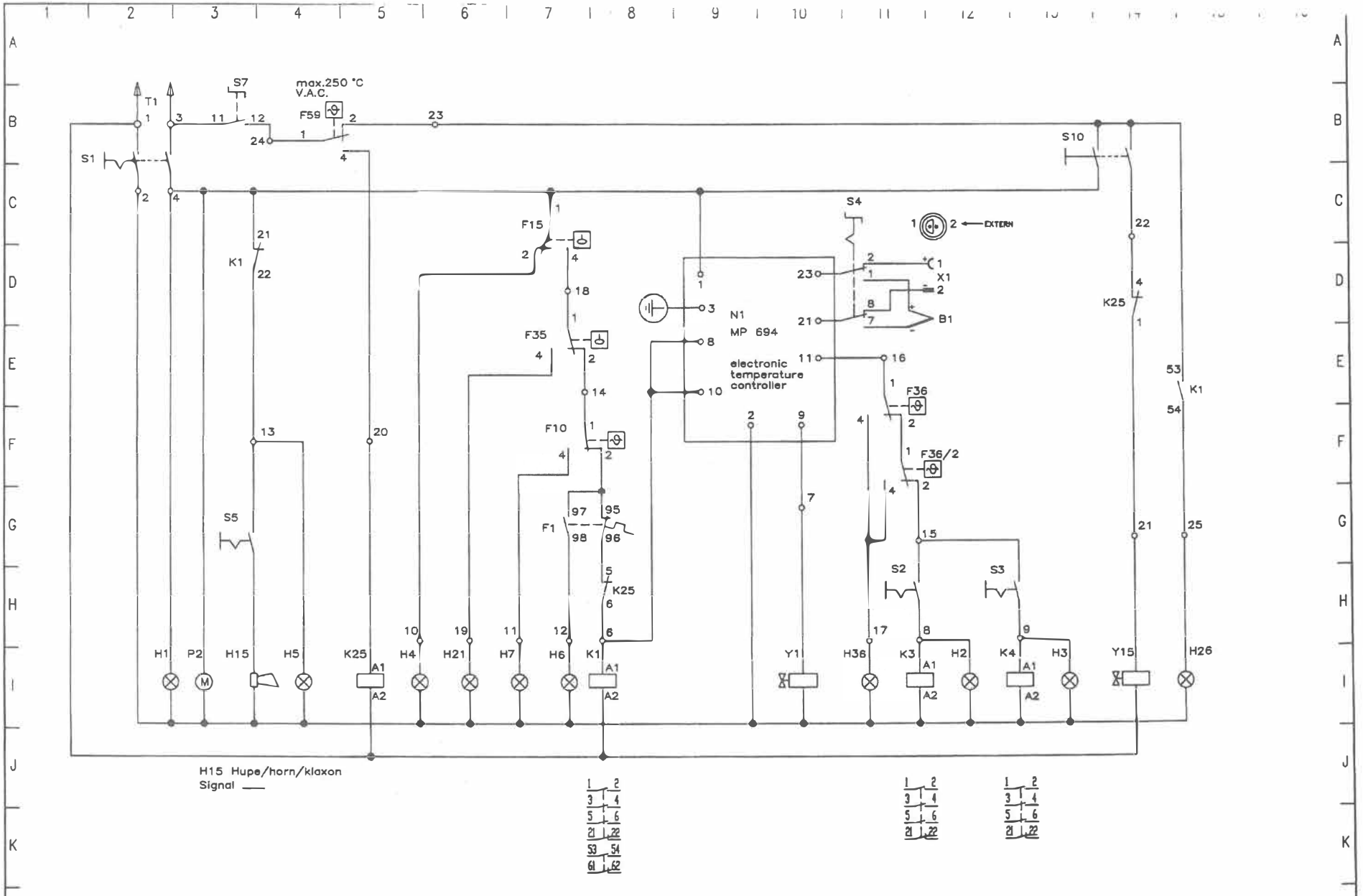

			bearb.			TOOL-TEMP AG Kreuzlingerstrasse 71 CH-8590 Romanshorn (Schweiz) Tel. ++41 71 463 51 51	Elektroschema Wiring diagram Schéma électrique Schema elettrico	EL-1392	TT 380 16kW / MP 694 03/01 ->	Blatt Nr. / Anzahl
			gez.	28.03.01	Ja					
			gepr.	31.3.01	A. D.					
Änderung	Datum	Name	Ursprung		Ersatz für:	Ersetzt durch:				

B 1	Thermoelement intern	internal thermocouple	thermocouple interne	termocoppia interna
F 1	Thermorelais Pumpe 1	overload relay pump 1	relais thermique pompe 1	interruttore a soccorritore termico pompa 1
F 7	Feinsicherung 1A primär T1	fuse 1A prim. T1	fusible verre 1A prim. T1	fusibile fino 1A primario T1
F 8	Feinsicherung 1A sekundär T1	fuse 1A sec. T1	fusible verre 1A sec. T1	fusibile fino 1A secondario T1
F 10	einstellbarer Sicherheitsthermostat	safety thermostat adjustable	thermostat de sécurité ajustable	termostato di sicurezza regolabile
F 15	Niveaukontrolle (Gerät aus)	level control (unit off)	contrôle de niveau (appareil arrêt)	controllo livello (spegne centralina)
F 20	Leitungsschutzschalter 6A	automatic cut-off 6A	disjoncteur 6A	interruttore 6A
F 22-/2/3/4	Leitungsschutzschalter 16A	automatic cut-off 16A	disjoncteur 16A	interruttore 16A
F 35	Niveau zu hoch	level too high	niveau trop haut	livello alto
F 36-/2	einst. Thermostat Temp.begrenzung für Heizung	adjust. thermostat temp.limit for heater	thermostat ajust. pour limitation du chauffage	termostato di sicurezza registrabile per temp. mass. riscald.
F 59	Sicherheitsthermostat Formentleerung	safety thermostat for mould drainage	thermostat de sécurité pour vidange du moule	termostato di sicurezza svuotamento stampo
H 1	Lampe Gerät EIN/AUS	unit ON/OFF lamp	lampe MARCHE/ARRET	lampada centralina ACCESO/SPENTO
H 2	Lampe Heizung 1	heater 1 lamp	lampe chauffage 1	lampada riscaldamento 1
H 3	Lampe Heizung 2	heater 2 lamp	lampe chauffage 2	lampada riscaldamento 2
H 4	Lampe Niveaukontrolle	level control lamp	lampe contrôle du niveau	lampada controllo livello
H 5	Lampe Hupe	horn lamp	lampe klaxon	lampada segnale acustico
H 6	Lampe Motorschutzrelais	overload relay lamp	lampe relais thermique	lampada termocoppia motore
H 7	Lampe Sicherheitsthermostat	safety thermostat lamp	lampe thermostat de sécurité	lampada termostato di sicurezza
H 15	Hupe	horn	klaxon	segnale acustico
H 21	Lampe Niveau zu hoch	lamp for level too high	lampe du niveau trop haut	lampada livello alto
H 26	Lampe VAC	VAC lamp	lampe VAC	lampada VAC
H 36	Lampe Sicherheitsthermostat für Heizung	lamp for safety thermostat for heater	lampe thermostat sécurité du chauffage	lampada termostato di sicurezza per riscaldamento
K 1	Schütz Pumpenmotor 1 (Hauptschütz)	contactor pump motor 1 (main contactor)	contacteur moteur pompe 1 (relais générale)	relais motore pompa 1 (relais generale)
K 3	Schütz Heizung 1	contactor heater 1	contacteur chauffage 1	relais riscaldamento 1
K 4	Schütz Heizung 2	contactor heater 2	contacteur chauffage 2	relais riscaldamento 2
K 4/2	Schütz Heizung 3	contactor heater 3	contacteur chauffage 3	relais riscaldamento 3
K 23	Hilfsrelais anzugverzögert	auxiliary relay start-delayed adjustable	relais aux. temporisé à l'enclenchement	relais ausiliario ad azionamento ritardato
K 25	Hilfsrelais allgemein	auxiliary for general use	relais auxiliaire gen.	relais ausiliario generale
M 1	Motor Pumpe 1	motor pump 1	moteur pompe 1	motore pompa 1
N 1	Temperaturregler	electronic temperature controller	régulateur électronique de température	regolatore temperatura
P 2	Betriebsstundenzähler	hours meter	compteur horaire	contatore ore funzionamento
Q 1	Hauptschalter	main switch	interrupteur générale	interruttore generale
R 1	Heizung 1	heater 1	chauffage 1	riscaldamento 1
R 2	Heizung 2	heater 2	chauffage 2	riscaldamento 2
R 3	Heizung 3	heater 3	chauffage 3	riscaldamento 3
S 1	Schalter Gerät "EIN-AUS"	switch unit "on/off"	interrupteur appareil "marche/arrêt"	interruttore centralina "acceso/spento"
S 2	Schalter Heizung 1	switch for heater 1	interrupteur chauffage 1	interruttore riscaldamento 1
S 3	Schalter Heizung 2+3	switch for heater 2+3	interrupteur chauffage 2+3	interruttore riscaldamento 2+3
S 4	Schalter Thermoelement/Fe-Ko/Pt-100	switch for thermocouple/Fe-Ko/Pt-100	interrupteur thermocouple/Fe-Ko/Pt-100	interruttore termocoppia/Fe-Ko/Pt-100
S 5	Schalter Hupe	switch for horn	interrupteur klaxon	interruttore segnale acustico
S 7	Wendeschalter Pumpe	change-over switch for pump	inverseur de marche de la pompe	invertitore di marcia per pompa
S 10	Drucktaster Formentleerung	press button for mould drainage	bouton-poussoir pour vidange du moule	pulsante svuotamento stampo
T 1	Trafo Steuerung	transformer for electric control	transformateur de commande	trasformatore di comando
X 1	Steckdose/Stecker für Thermoelement/Fe-Ko/Pt-100	socket/connector for thermocouple/Fe-Ko/Pt-100	prise/fiche pour thermocouple/Fe-Ko/Pt-100	presa/spina per termocoppia/Fe-Ko/Pt-100
Y 1	Magnetventil Wasserkühlung	solenoid valve for water cooling	électrovanne eau de refroidissement	valvola magnetica raffreddamento acqua
Y 15	Magnetventil Formentleerung	solenoid valve for mould drainage	électrovanne vidange du moule	valvola magnetica svuotamento stampo

			bearb.			TOOL-TEMP AG Kreuzlingerstrasse 71 CH-8590 Romanshorn (Schweiz) Tel. ++41 71 463 51 51	Elektroschema Wiring diagram Schéma électrique Schema elettrico	EL-1394	TT 380 24kW MP 694	Blatt Nr. / Anzahl
			gez.	28.03.01	Ja					
			gepr.							
Änderung	Datum	Name	Ursprung		Ersatz für:	Ersetzt durch:				

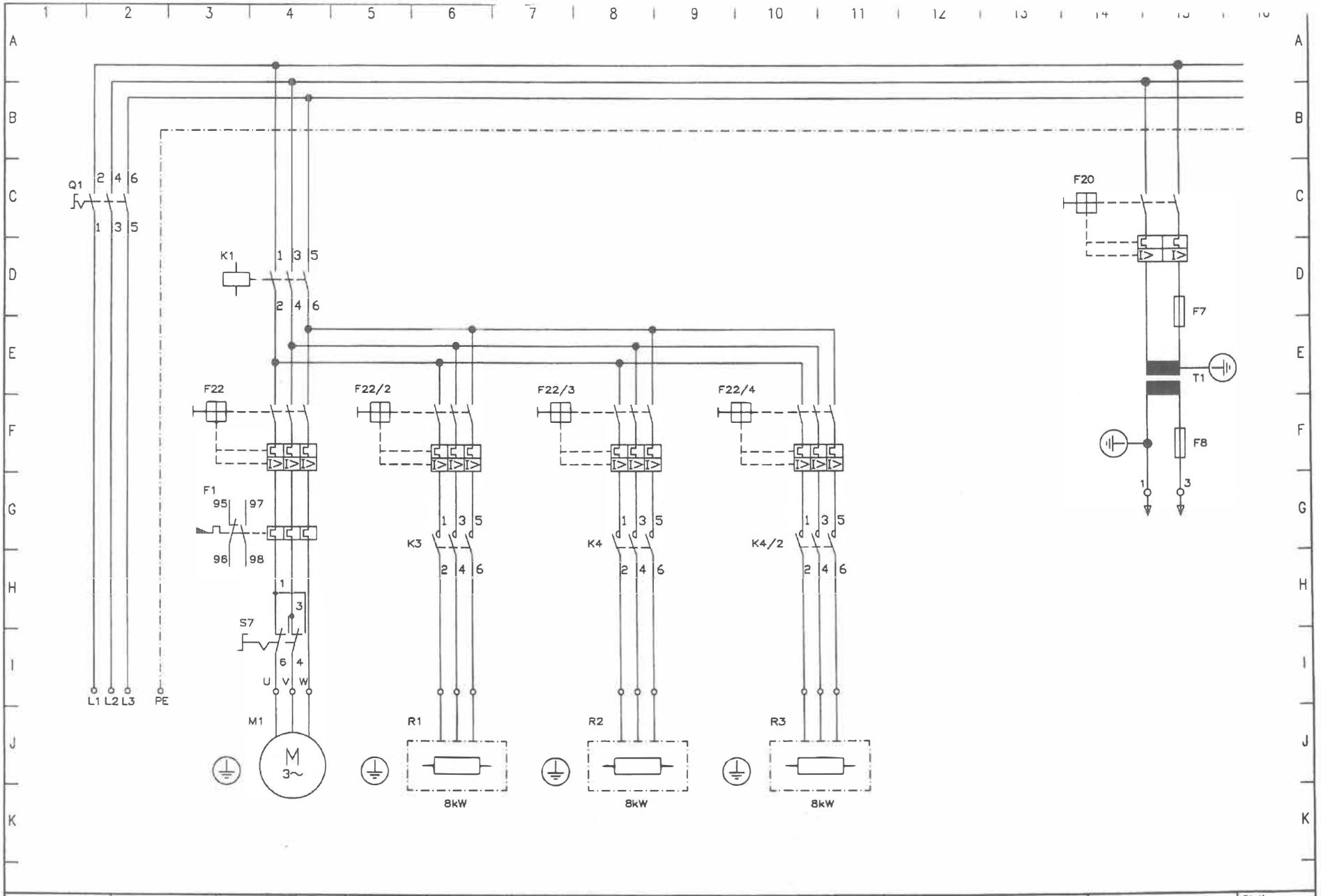

			bearb.			TOOL-TEMP AG Kreuzlingerstrasse 71 CH-8590 Romanshorn (Schweiz) Tel. ++41 71 463 51 51	Elektroschema Wiring diagram Schéma électrique Schema elettrico	EL-1394	TT 380 24kW 03/01 ->	Blatt Nr. / Anzahl
			gez.	28.03.01	Ja					
			gepr.	31.3.01						
Änderung	Datum	Name	Ursprung		Ersatz für:	Ersetzt durch:				

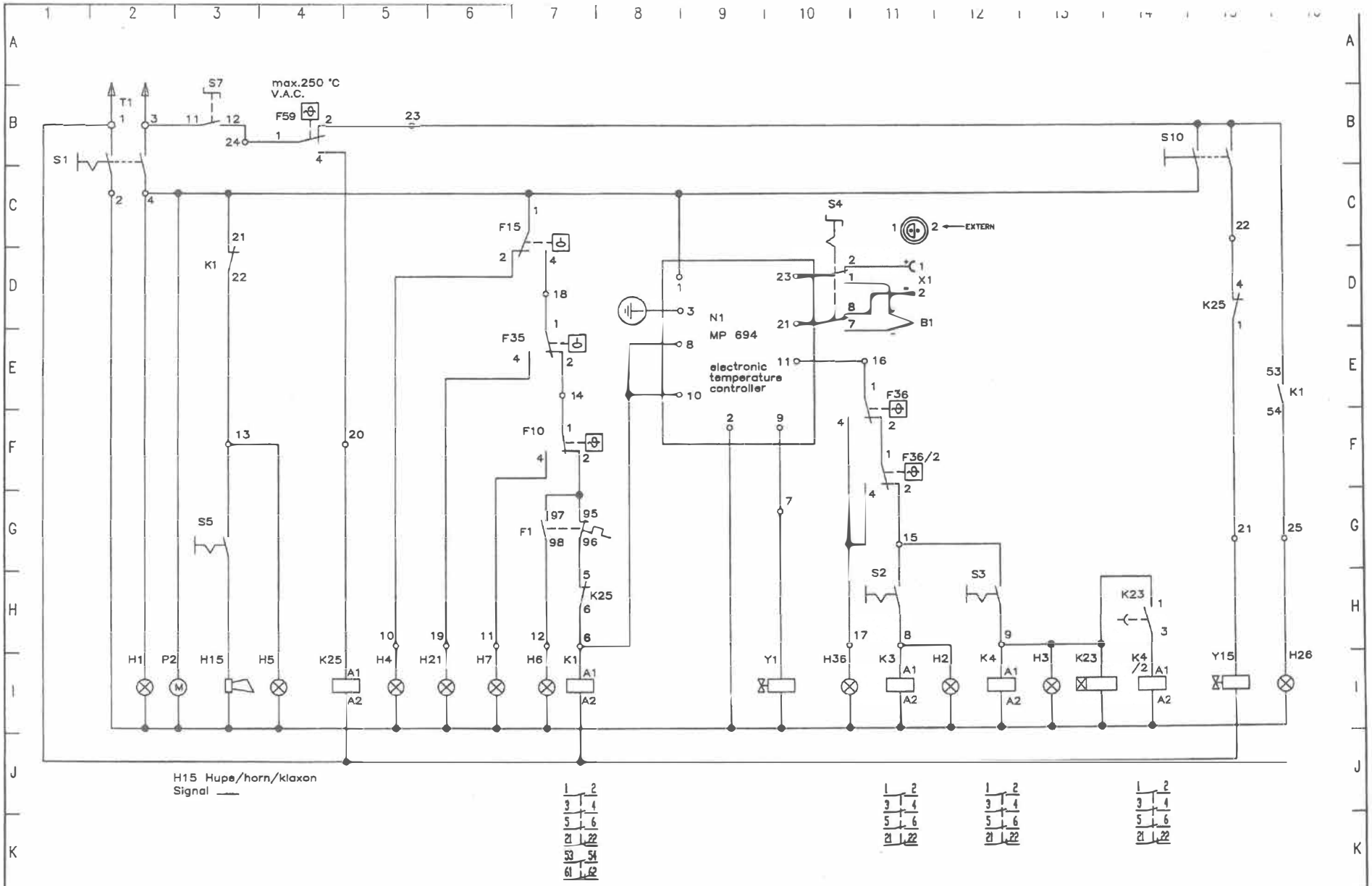

			bearb.			TOOL-TEMP AG Kreuzlingerstrasse 71 CH-8590 Romanshorn (Schweiz) Tel. ++41 71 463 51 51	Elektroschema Wiring diagram Schéma électrique Schema elettrico	EL-1394	TT 380 24kW / MP 694 03/01 ->	Blatt Nr.	Anzahl
			gez.	28.03.01	Ja						
			gepr.	31.3.01	A. Di						
Änderung	Datum	Name	Ursprung		Ersatz für:	Ersetzt durch:					

B 1	Thermoelement intern	internal thermocouple	thermocouple interne	termocoppia interna
F 1	Thermorelais Pumpe 1	overload relay pump 1	relais thermique pompe 1	interruttore a soccorritore termico pompa 1
F 7	Feinsicherung 1A primär T1	fuse 1A prim. T1	fusible verre 1A prim. T1	fusibile fino 1A primario T1
F 8	Feinsicherung 1A sekundär T1	fuse 1A sec. T1	fusible verre 1A sec. T1	fusibile fino 1A secondario T1
F 10	einstellbarer Sicherheitsthermostat	safety thermostat adjustable	thermostat de sécurité ajustable	termostato di sicurezza regolabile
F 15	Niveaukontrolle (Gerät aus)	level control (unit off)	contrôle de niveau (appareil arrêt)	controllo livello (spegne centralina)
F 20	Leitungsschutzschalter 6A	automatic cut-off 6A	disjoncteur 6A	interruttore 6A
F 22-/2/3/4/5	Leitungsschutzschalter 16A	automatic cut-off 16A	disjoncteur 16A	interruttore 16A
F 35	Niveau zu hoch	level too high	niveau trop haut	livello alto
F 36-/2	einst. Thermostat Temp.begrenzung für Heizung	adjust. thermostat temp.limit for heater	thermostat ajust. pour limitation du chauffage	termostato di sicurezza registrabile per temp.
F 59	Sicherheitsthermostat Formentleerung	safety thermostat for mould drainage	thermostat de sécurité pour vidange du moule	termostato di sicurezza svuotamento stampo
H 1	Lampe Gerät EIN/AUS	unit ON/OFF lamp	lampe MARCHE/ARRET	lampada centralina ACCESO/SPENTO
H 2	Lampe Heizung 1	heater 1 lamp	lampe chauffage 1	lampada riscaldamento 1
H 3	Lampe Heizung 2	heater 2 lamp	lampe chauffage 2	lampada riscaldamento 2
H 4	Lampe Niveaukontrolle	level control lamp	lampe contrôle du niveau	lampada controllo livello
H 5	Lampe Hupe	horn lamp	lampe klaxon	lampada segnale acustico
H 6	Lampe Motorschutzrelais	overload relay lamp	lampe relais thermique	lampada termocoppia motore
H 7	Lampe Sicherheitsthermostat	safety thermostat lamp	lampe thermostat de sécurité	lampada termostato di sicurezza
H 15	Hupe	horn	klaxon	segnale acustico
H 21	Lampe Niveau zu hoch	lamp for level too high	lampe du niveau trop haut	lampada livello alto
H 26	Lampe VAC	VAC lamp	lampe VAC	lampada VAC
H 36	Lampe Sicherheitsthermostat für Heizung	lamp for safety thermostat for heater	lampe thermostat sécurité du chauffage	lampada termostato di sicurezza per
K 1	Schütz Pumpenmotor 1 (Hauptschütz)	contactor pump motor 1 (main contactor)	contacteur moteur pompe 1 (relais générale)	relais motore pompa 1 (relais generale)
K 3	Schütz Heizung 1	contactor heater 1	contacteur chauffage 1	relais riscaldamento 1
K 4	Schütz Heizung 2	contactor heater 2	contacteur chauffage 2	relais riscaldamento 2
K 4/2	Schütz Heizung 3	contactor heater 3	contacteur chauffage 3	relais riscaldamento 3
K 4/3	Schütz Heizung 4	contactor heater 4	contacteur chauffage 4	relais riscaldamento 4
K 23-/2	Hilfsrelais anzugverzögert	auxiliary relay start-delayed adjustable	relais aux. temporisé à l'enclenchement	relais ausiliario ad azionamento ritardato
K 25	Hilfsrelais allgemein	auxiliary for general use	relais auxiliaire gen.	relais ausiliario generale
M 1	Motor Pumpe 1	motor pump 1	moteur pompe 1	motore pompa 1
N 1	Temperaturregler	electronic temperature controller	régulateur électronique de température	regolatore temperatura
P 2	Betriebsstundenzähler	hours meter	compteur horaire	contatore ore funzionamento
Q 1	Hauptschalter	main switch	interrupteur générale	interruttore generale
R 1	Heizung 1	heater 1	chauffage 1	riscaldamento 1
R 2	Heizung 2	heater 2	chauffage 2	riscaldamento 2
R 3	Heizung 3	heater 3	chauffage 3	riscaldamento 3
R 4	Heizung 4	heater 4	chauffage 4	riscaldamento 4
S 1	Schalter Gerät "EIN-AUS"	switch unit "on/off"	interrupteur appareil "marche/arrêt"	interruttore centralina "acceso/spento"
S 2	Schalter Heizung 1	switch for heater 1	interrupteur chauffage 1	interruttore riscaldamento 1
S 3	Schalter Heizung 2-4	switch for heater 2-4	interrupteur chauffage 2-4	interruttore riscaldamento 2-4
S 4	Schalter Thermoelement/Fe-Ko/Pt-100	switch for thermocouple/Fe-Ko/Pt-100	interrupteur thermocouple/Fe-Ko/Pt-100	interruttore termocoppia/Fe-Ko/Pt-100
S 5	Schalter Hupe	switch for horn	interrupteur klaxon	interruttore segnale acustico
S 7	Wendeschalter Pumpe	change-over switch for pump	inverseur de marche de la pompe	invertitore di marcia per pompa
S 10	Drucktaster Formentleerung	press button for mould drainage	bouton-poussoir pour vidange du moule	pulsante svuotamento stampo
T 1	Trafo Steuerung	transformer for electric control	transformateur de commande	trasformatore di comando
X 1	Steckdose/Stecker für Thermoelement/Fe-Ko/Pt-100	socket/connector for thermocouple/Fe-Ko/Pt-100	prise/fiche pour thermocouple/Fe-Ko/Pt-100	presa/spina per termocoppia/Fe-Ko/Pt-100
Y 1	Magnetventil Wasserkühlung	solenoid valve for water cooling	électrovanne eau de refroidissement	valvola magnetica raffreddamento acqua
Y 15	Magnetventil Formentleerung	solenoid valve for mould drainage	électrovanne vidange du moule	valvola magnetica svuotamento stampo

			bearb.			TOOL-TEMP AG Kreuzlingerstrasse 71 CH-8590 Romanshorn (Schweiz) Tel. ++41 71 463 51 51	Elektroschema Wiring diagram Schéma électrique Schema elettrico	EL-1396	TT 380 32kW MP 694	Blatt Nr. / Anzahl
			gez.	30.03.01	Ja					
			gepr.							
Änderung	Datum	Name	Ursprung		Ersatz für:	Ersetzt durch:				

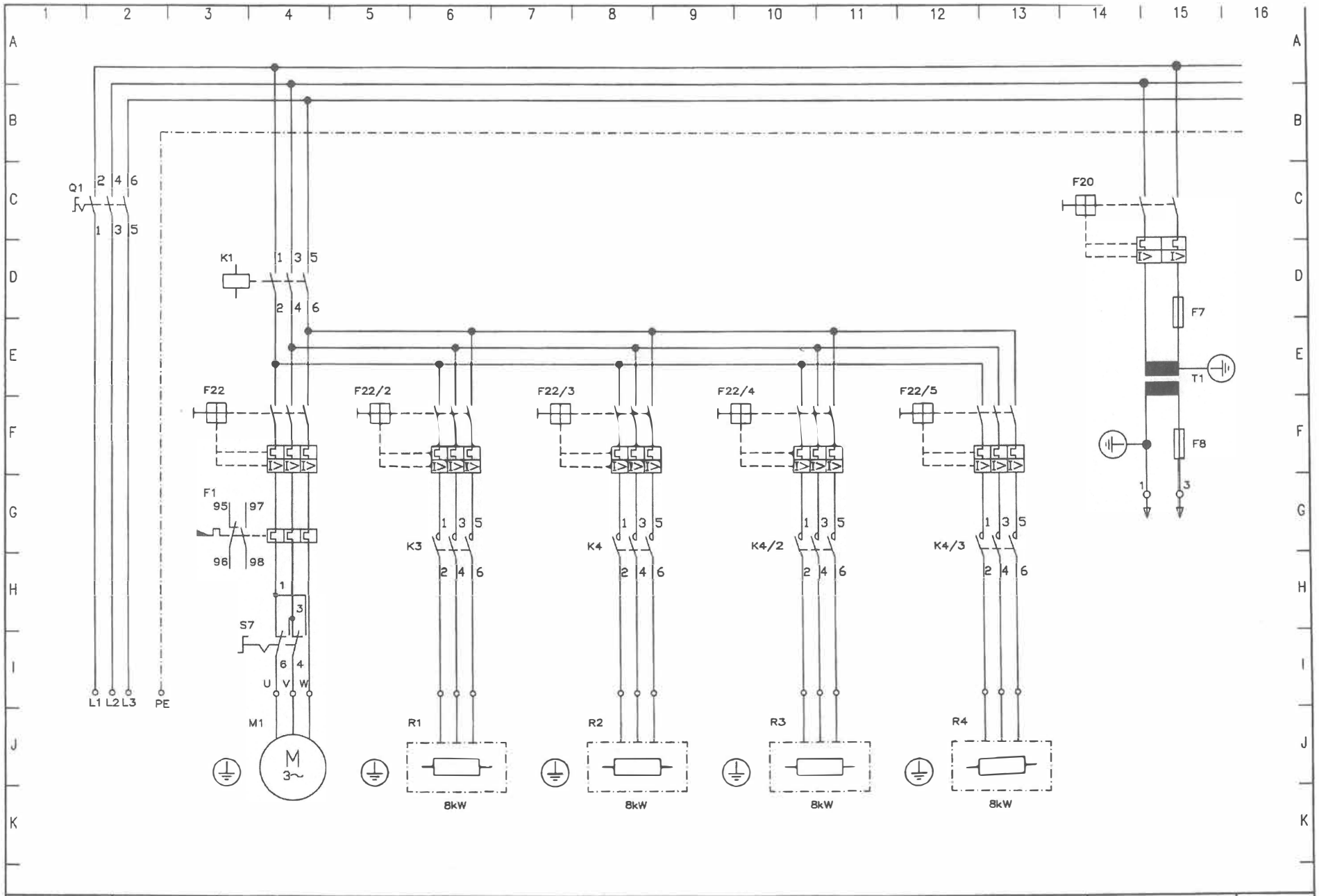

			bearb.			TOOL-TEMP AG Kreuzlingerstrasse 71 CH-8590 Romanshorn (Schweiz) Tel. ++41 71 463 51 51	Elektroschema Wiring diagram Schéma électrique Schema elettrico	EL-1396	TT 380 32kW 03/01 ->	Blatt
			gez.	30.03.01	Ja					Nr. / Anzahl
			gepr.	4.4.01	A. Di					
Änderung	Datum	Name	Ursprung		Ersatz für:	Ersetzt durch:				

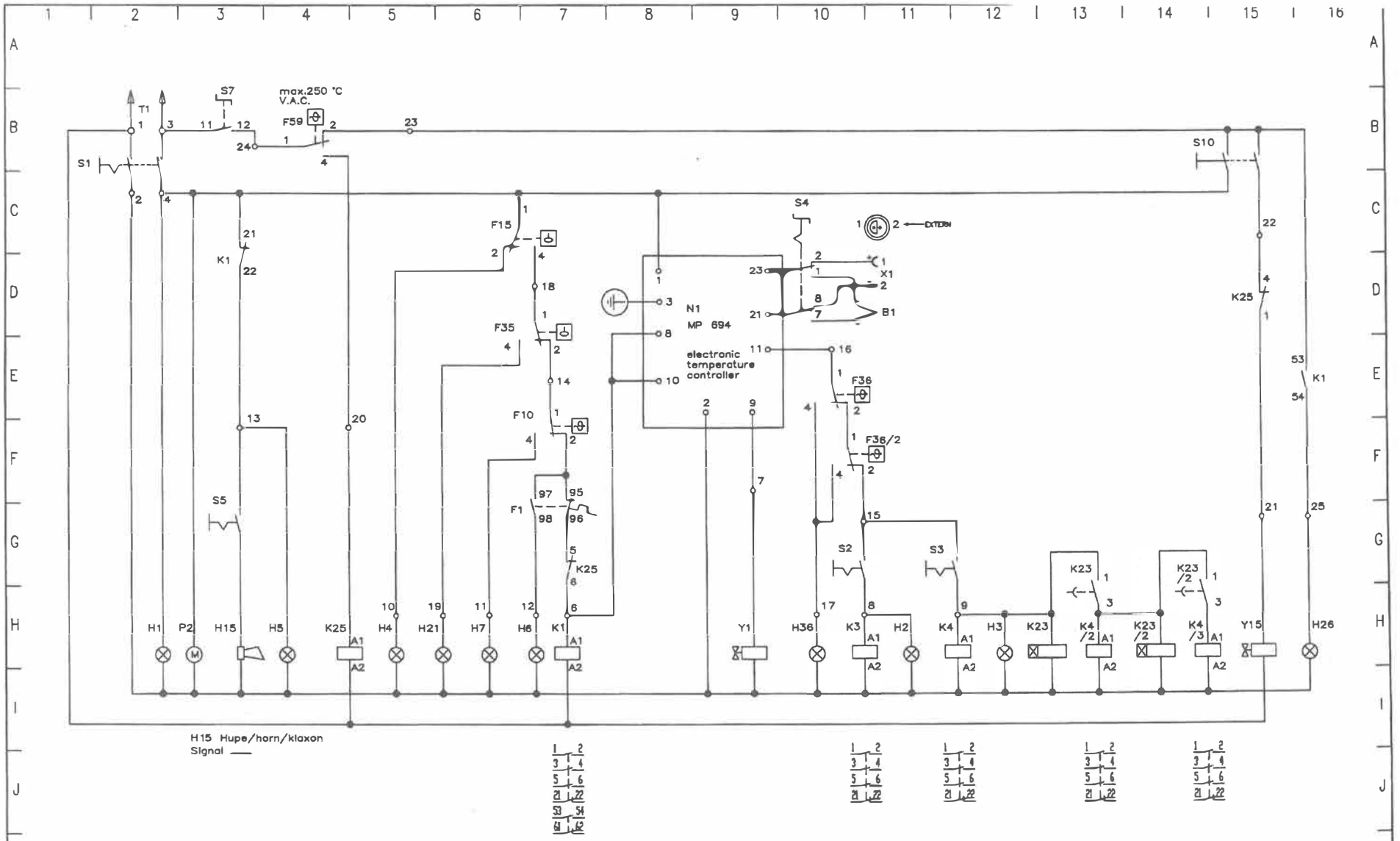

			bearb.			TOOL-TEMP AG Kreuzlingerstrasse 71 CH-8590 Romanshorn (Schweiz) Tel. ++41 71 463 51 51	Elektroschema Wiring diagram Schéma électrique Schema elettrico	EL-1396	TT 380 32kW / MP 694 03/01 ->	Blatt
			gez.	30.03.01	Ja					Nr. / Anzahl
			gepr.	4.4.01						
Änderung	Datum	Name	Ursprung		Ersatz für:	Ersetzt durch:				